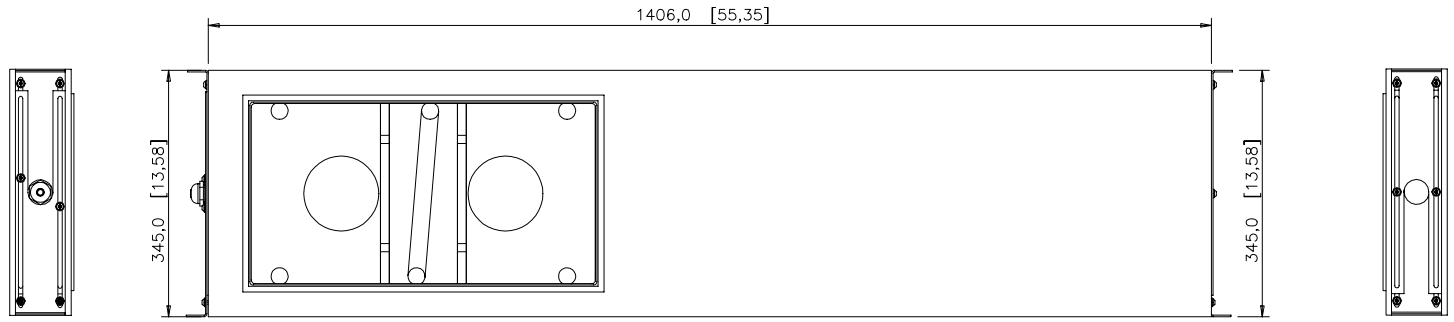

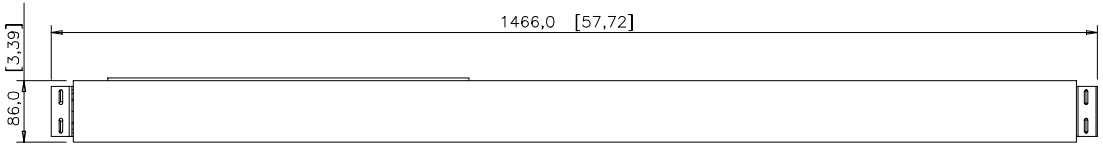

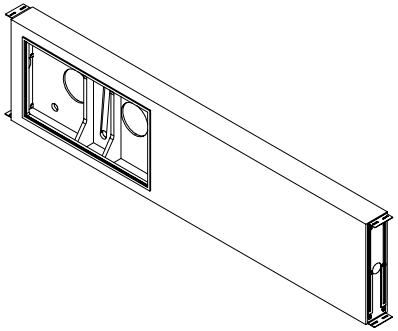

ISSUE HISTORY

ISS	ECR/SAN NUMBER	REQ
3	PDC3216	
DRN	DATE	CKD
PLB	18-03-09	

ISSUE DETAILS:

GROOVE ADDED TO PROVIDE CLEARANCE FOR CENTRE BRACE.

ISS	ECR/SAN NUMBER	REQ
2		
DRN	DATE	CKD
PLB	17-12-08	

ISSUE DETAILS:

MODIFICATIONS TO BRACE.

IF IN DOUBT ASK

ALL COMPONENTS MUST BE RoHS COMPLIANT

Bowers & Wilkins

MATERIAL	FINISH	TITLE	FIRST DRAWN BY	COPYRIGHT ©	DOC PART NO.	PART NO.
–	–	BACK BOX LINE DRAWING	PLB	2008 B&W GROUP LTD		ZZ24835
			DATE 08-12-08	SCALE 1:5	DRG SIZE A2	3-D DATA FILE NO N/A -ISS-
						2-D DRG. NO. SHEET OF A9507-1-1-ISS -3